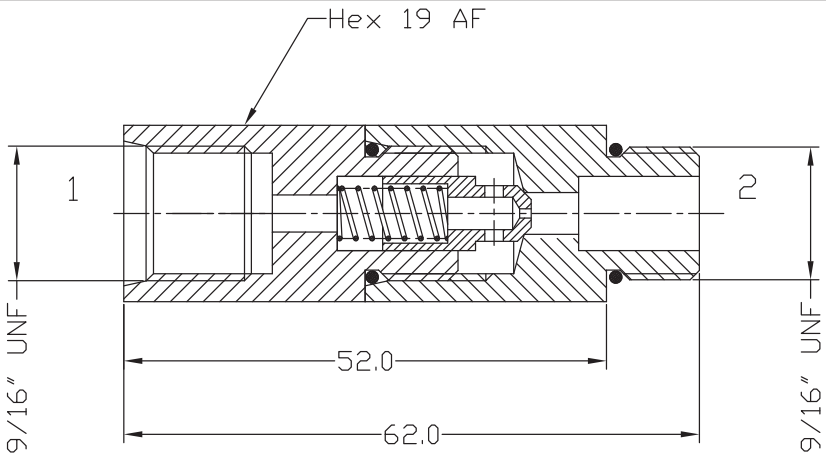

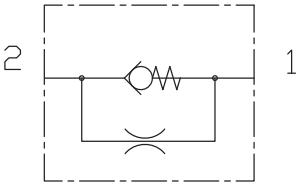

1. MAX WORKING PRESSURE - 350 BAR
2. MAX FREE FLOW - 10 L/MIN
3. SIZE OF THE ORIFICE FOR REVERSE FLOW - 1.0 MM

OILPATH PTY LTD
21 DELORAINE ROAD, EDWARDSTOWN
PHONE (08) 277 4933 FAX (08) 277 9126 A.C.N. 007 683 472

REVISION DETAILS			
ECN	DATE	DESCRIPTION	

NOTES

GENERAL TOLERANCE
0. = ±0.5 mm
0.0 = ±0.25 mm
0.00 = ±0.10 mm
0.000 = ±0.02 mm
√ 1.6
◎ 0.10
UNLESS STATED OTHERWISE
SCALE: 4:1 SHEET 1 OF 1

TITLE INLINE CHECK VALVE WITH RESTRICTED REVERSE FLOW OP89

DRG. NO. 681051
MATL:
DRN: V.Troyanovsky DATE: 10/10/97
0 REV A A4
CKD: DATE:
APP: DATE:

OILPATH HYDRAULICS PTY LTD
21 DELORAINE ROAD, EDWARDSTOWN
PHONE (08) 8277 4933 FAX (08) 8277 9126 A.B.N. 94117925210

DATE: 2-3-06